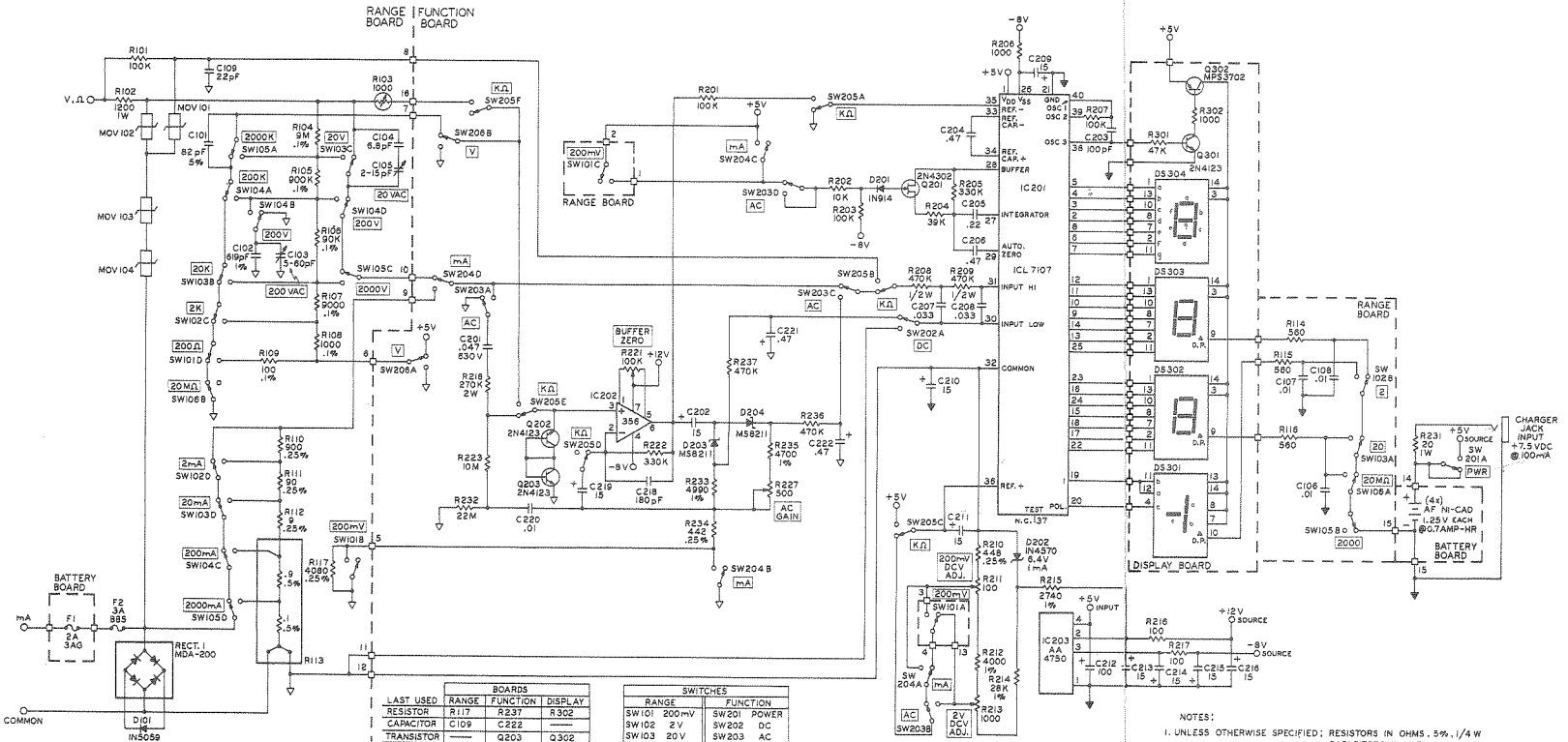

BOARDS			
LAST USED	RANGE	FUNCTION	DISPLAY
RESISTOR	R117	R237	R302
CAPACITOR	C109	C222	——
TRANSISTOR	——	Q203	Q302
DIODES	D101	D202	——
INTEGRATED CIRCUIT	——	IC203	——
DISPLAY	——	——	DS304

NOT USED: R118, R119 RANGE BOARD
R219, R220, R224, R225, R226, R228, R229, R230 } FUNCTION BOARD
C217

SWITCHES	
RANGE	FUNCTION
SW101 200mV	SW201 POWER
SW102 2V	SW202 DC
SW103 20V	SW203 AC
SW104 200V	SW204 mA
SW105 2000V	SW205 KΩ
SW106 20MΩ	SW206 V

NOTES:
1. UNLESS OTHERWISE SPECIFIED; RESISTORS IN OHMS, 5%, 1/4 W CAPACITORS IN μF
2. ⏚ DENOTES ANALOG GROUND
⏚ DENOTES DIGITAL GROUND } DO NOT SHORT TOGETHER.

FIGURE 6-2. SCHEMATIC DIAGRAM 461-2